U-BOLTS & TIE PLATES

Square

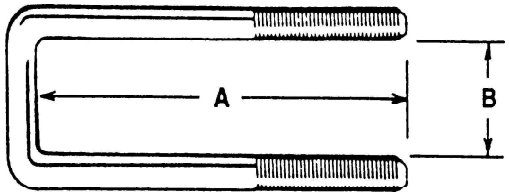

U-BOLT	STOCK SIZE	A(IN)	B(IN)	THREAD LENGTH	TIE PLATE
UB6W/N&W	9/16	4.75	1.5	2"	AP6
UB7SW/N&W	9/16	4.75	1.75	2"	AP8
UB7W/N&W	9/16	5.75	1.75	2"	AP8
UB16W/N&W	9/16	4.75	2	2"	AP8
UB8W/N&W	9/16	5.75	2	2.5"	AP8

Round

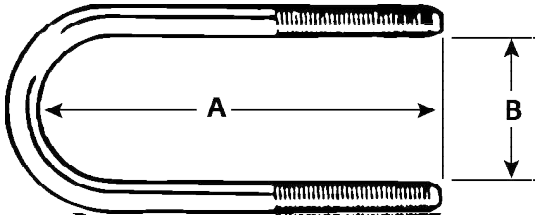

U-bolt	Stock Size (in.)	A(in.)	B(in.)	THREAD LENGTH	Tie Plate	Spring Width (in.)
11-54W/N*	3/8	4.25	1.75	1.5"	12-40	1 3/4
5920K	1/2	4.25	1.75	2"	7717	1 3/4
11-21W/N&W	1/2	5.5	2 3/8	1.75"	AP238	1 3/4
					or 12-4	2
UB238W/N&W	1/2	6.25	2 3/8	1.75"	AP238	1 3/4
					or 12-4	2
11-16W/N&W	1/2	6	3	2"	AP300	1 3/4
					or 12-2	2
11-17W/N&W	1/2	6.5	3	2"	AP300	1 3/4
					or 12-2	2
11-18W/N&W	1/2	7	3	2"	AP300	1 3/4
					or 12-2	2
11-65W/N&W	9/16	7.75	3.5	2"	12-37	2
11-64W/N*	5/8	8.25	4	2"	12-42	2
11-55	3/4	9.25	4	2.5"		
11-77W/N*	5/8	9	5	2"	12-49	2 1/2
					or 12-53	3
11-70W/N*	3/4	9.5	5	2.5"	12-46	3

** Does Not Use Lock Washer*

Buyers Products Company

Square Bend U-Bolt Kit

4 U-bolts
8 Hex Nuts
8 Lockwashers
4 Tie Bars
Grade 5 Equivalent

U-BOLT KIT	STOCK SIZE	A(IN)	B(IN)
UB623518	5/8	18"	3.63"
UB623520	5/8	20"	3.63"

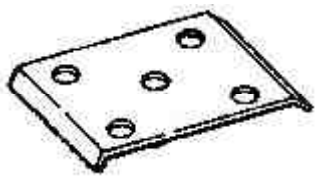

Tie Plate

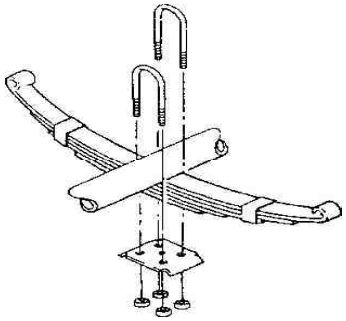

Nuts & Washers

(Included with U-bolts)

6-10	3/8" Nut
6-17	7/16" Nut
UN1/2	½" Nut
UBW2	½" Lock Washer
UN9/16	9/16" Nut
UBW1	9/16" Lock Washer
6-38	5/8" Nut
6-113	3/4" Nut